This file has been cleaned of potential threats.

If you confirm that the file is coming from a trusted source, you can send the following SHA-256 hash value to your admin for the original file.

468a15b08b376875d35e4e8a1956666a6e5be047b193818856e3dcbb49e99888

To view the reconstructed contents, please SCROLL DOWN to next page.

DQOR® SUB WMB

WALL & CEILING MOUNT BRACKET FOR DQOR® SUB 8

PRODUCT INFORMATION

This item is a product-specific accessory intended exclusively for use with subwoofers from the DQOR® SUB 8 Series (LDDQORSUB8, LDDQORSUB8A, and LDDQORSUB8D).

These installation instructions do not replace the user manual of the associated product. Always read the user manual first.

This accessory has no influence on the intended use of the associated product. Observe the safety instructions in the user manual of the associated product! The technical data stated in the user manual may change in connection with this accessory.

SAFETY INSTRUCTIONS

1. Please read this manual carefully.
2. Keep all information and instructions in a safe place.
3. Follow the instructions.
4. Use the accessory in the prescribed manner only.

DANGER: KEEP AWAY FROM CHILDREN! THE PRODUCT CONTAINS SMALL PARTS THAT CAN BE SWALLOWED AS WELL AS PACKAGING MATERIAL THAT CAN BE SWALLOWED! PLASTIC BAGS MUST BE KEPT OUT OF THE REACH OF CHILDREN!

DESCRIPTION

The custom-fit mounting bracket makes installing subwoofers from the LD DQOR® SUB 8 Series easy and flexible.

FEATURES

- Suitable for permanent outdoor installations
- Mounting bracket for wall and ceiling mounting
- Compatible with the subwoofers from the DQOR® SUB 8 Series
- Sturdy, durable steel construction with powder coating

PACKAGING CONTENT

Remove the product from the packaging and remove all packaging material. Please check the completeness and integrity of the delivery, and notify your distribution partner immediately after purchase if the delivery is not complete or if it is damaged.

The packaging content for the product LDDQORSUBWMB includes:

- 1× LD DQOR SUB mounting bracket
- 4 metal-reinforced rubber pads
- Drilling template (included in packaging)
- Safety and compliance information / Installation instructions in EN (multilingual installation instructions as a download via QR code in the safety and compliance information)

INSTALLATION

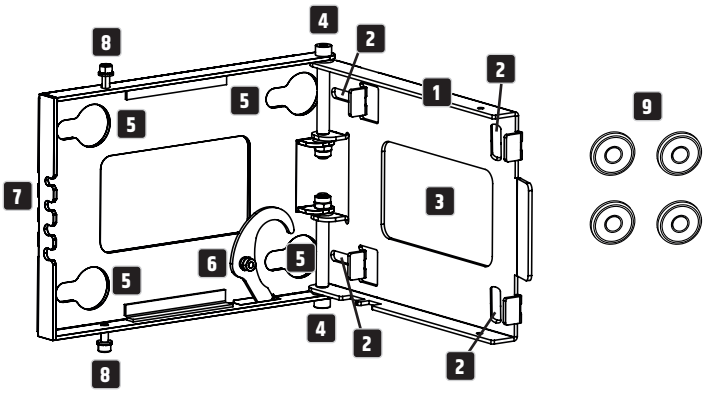

1 Wall or ceiling mounting plate
2 Four slotted holes for wall or ceiling mounting (**designed for screws with 8 mm diameter**)
3 Cable passage
4 Hinge
5 Four keyholes for subwoofer mounting
6 Safety hook
7 Four cable cut-outs in different sizes
8 Two locking screws that prevent the mounting bracket from opening after installation
9 Four rubber pads with metal reinforcement
10 Drilling template (not shown, included in packaging)

DANGER: Overhead mounting requires extensive experience, including calculating the load limit values of the installation materials used, and regular safety inspection of all installation materials and subwoofers! If you do not have these qualifications, do not attempt to perform an installation yourself. Refer instead to a qualified professional. There is a risk that devices that are incorrectly mounted and secured may come loose and fall down. This can cause serious injury or death.

ATTENTION: Make sure that the mounting surface is sufficiently stable and capable of carrying a load. Use suitable mounting materials (screws, dowels, etc.) for the mounting surface. Ensure that the connections are tight and that the mounting bracket and subwoofer cannot come loose.

Horizontal wall mounting: The mounting bracket must be mounted horizontally on a wall. The subwoofer must be attached to the mounting bracket so that the connection terminal is on the side of the mounting bracket where the cable cut-outs are located. Please note the imprint "TOP for horizontal mounting".

Vertical wall mounting: The mounting bracket must be mounted vertically on a wall with the hinge directed upwards. The subwoofer must be attached to the mounting bracket so that the connection terminal is facing downwards. Please note the imprint "TOP for vertical mounting".

Ceiling mounting: The subwoofer must be attached to the mounting bracket so that the connection terminal is on the side of the mounting bracket where the cable cut-outs are located.

TIP: For vertical wall mounting and ceiling mounting: Carry out the installation with two people and prepare the connection cables so that they only need to be connected to the subwoofer's connection terminal.

1 Mount the mounting bracket on a wall or ceiling. The mounting bracket does not need to be opened for this purpose.

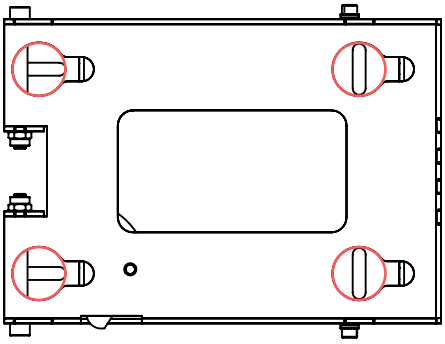

2 Loosen the four hexagon socket screws from the subwoofer (see markings). Attach the four enclosed rubber pads to the subwoofer using the loosened screws.

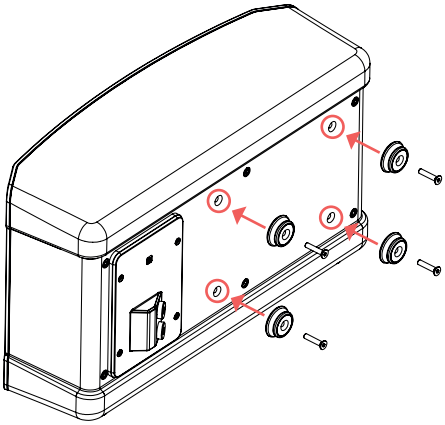

DQOR® SUB WMB

WALL & CEILING MOUNT BRACKET FOR DQOR® SUB 8

To help aid understanding, the mounting bracket is shown open in the two illustrations below, but it must be closed when the subwoofer is attached.

3 Lift the subwoofer onto the mounting bracket and insert the rubber pads through the keyholes. Then slide the subwoofer approximately 2.8 cm towards the cable cut-outs in the mounting bracket.

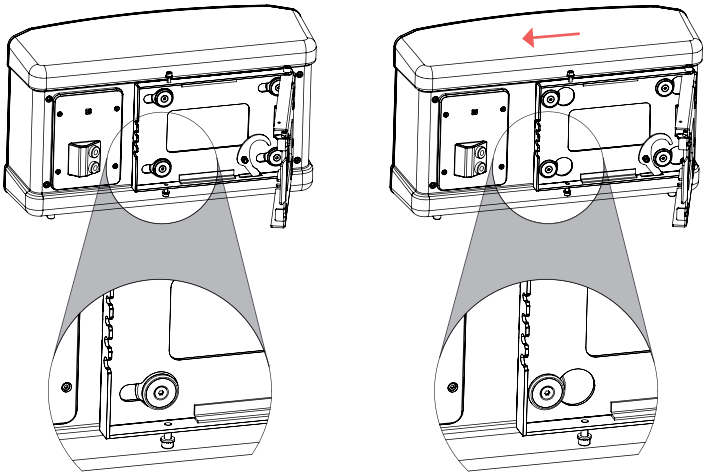

4 Step 1: Loosen the two locking screws (unscrew approximately 7 mm from the thread; do not remove). Step 2: Open the mounting bracket and place the safety hook over the rubber pad (push the lever towards the arrow as far as possible) to prevent the subwoofer from accidentally slipping out of the bracket.

TIP: Use a 5 mm hexagon screw-driver with a ball head to loosen and tighten the locking screws.

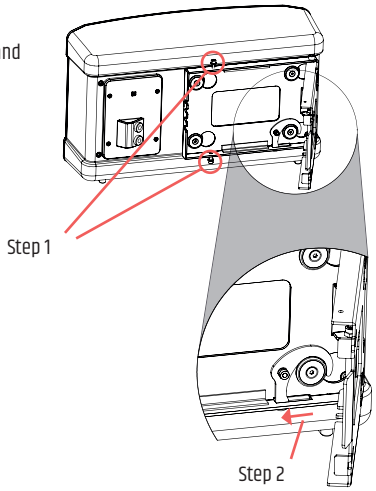

5 Carry out the cabling (description in the user manual for the corresponding subwoofer) and push the cables into the appropriate cable cut-outs. Close the mounting bracket (fold the subwoofer) and tighten both locking screws. The safety hook cannot be released when the mounting bracket is closed.

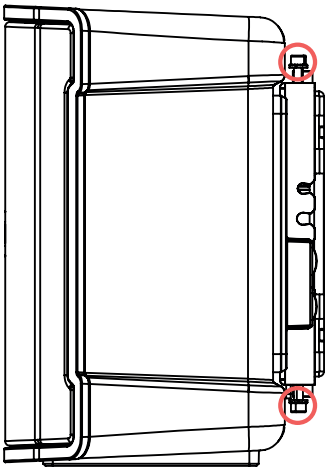

TECHNICAL DATA

Product number	LDDQORSUBWMB
Product type	Wall and ceiling mounting bracket
Material	Steel
Colour	Black, RAL9005
Surface finish	Powder-coated
Maximum total load capacity	16 kg only for DQOR® SUB 8 (A/D)
Dimensions (W × H × D)	286.5 × 215 × 29.1 mm
Weight	2.6 kg

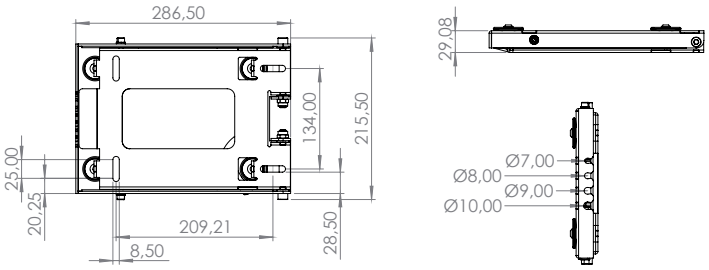

MANUFACTURER'S DECLARATIONS

Manufacturer's warranty and limitation of liability

Adam Hall GmbH, Adam-Hall-Str. 1, 61267 Neu Anspach, Germany
Email: info@adamhall.com / +49 (0)6081 / 9419-0.
Our current warranty conditions and limitation of liability can be found at:
https://cdn-shop.adamhall.com/media/pdf/MANUFACTURERS-DECLARATIONS_LD_SYSTEMS.pdf
For service requests, please contact your distribution partner.

DISPOSAL

Packaging:

1. Packaging can be returned to the reusable material cycle using common disposal methods.
2. Please separate the packaging in accordance with the disposal laws and recycling regulations in your country.

Product:

Dispose of the product in accordance with the applicable disposal regulations in your country.

Subject to misprints and errors, as well as technical or other modifications!